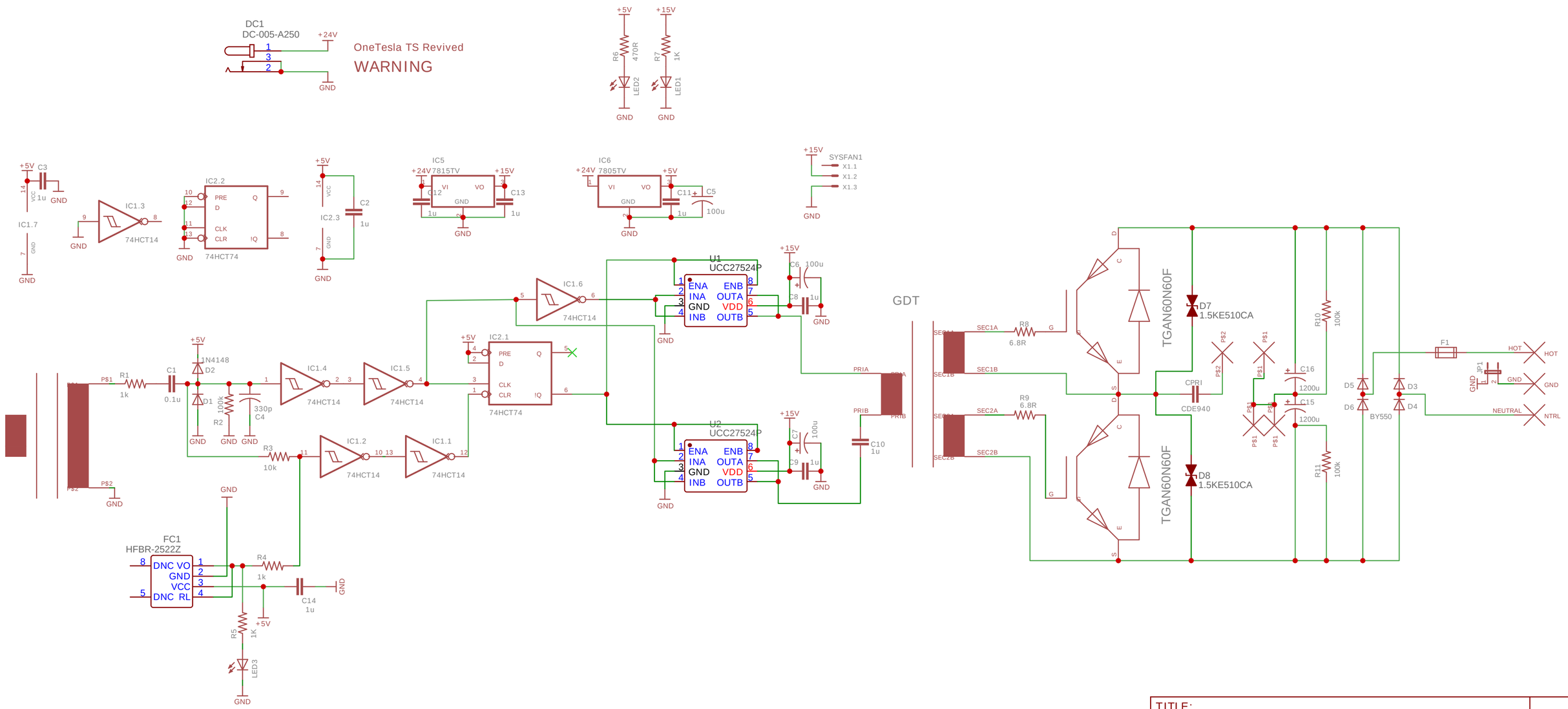

TITLE: OneTesla Revived TS 240V	REV: 3.0
Company: nil	Sheet: 1/1
Date: 2026-02-01 Drawn By: Flammable Electronics	