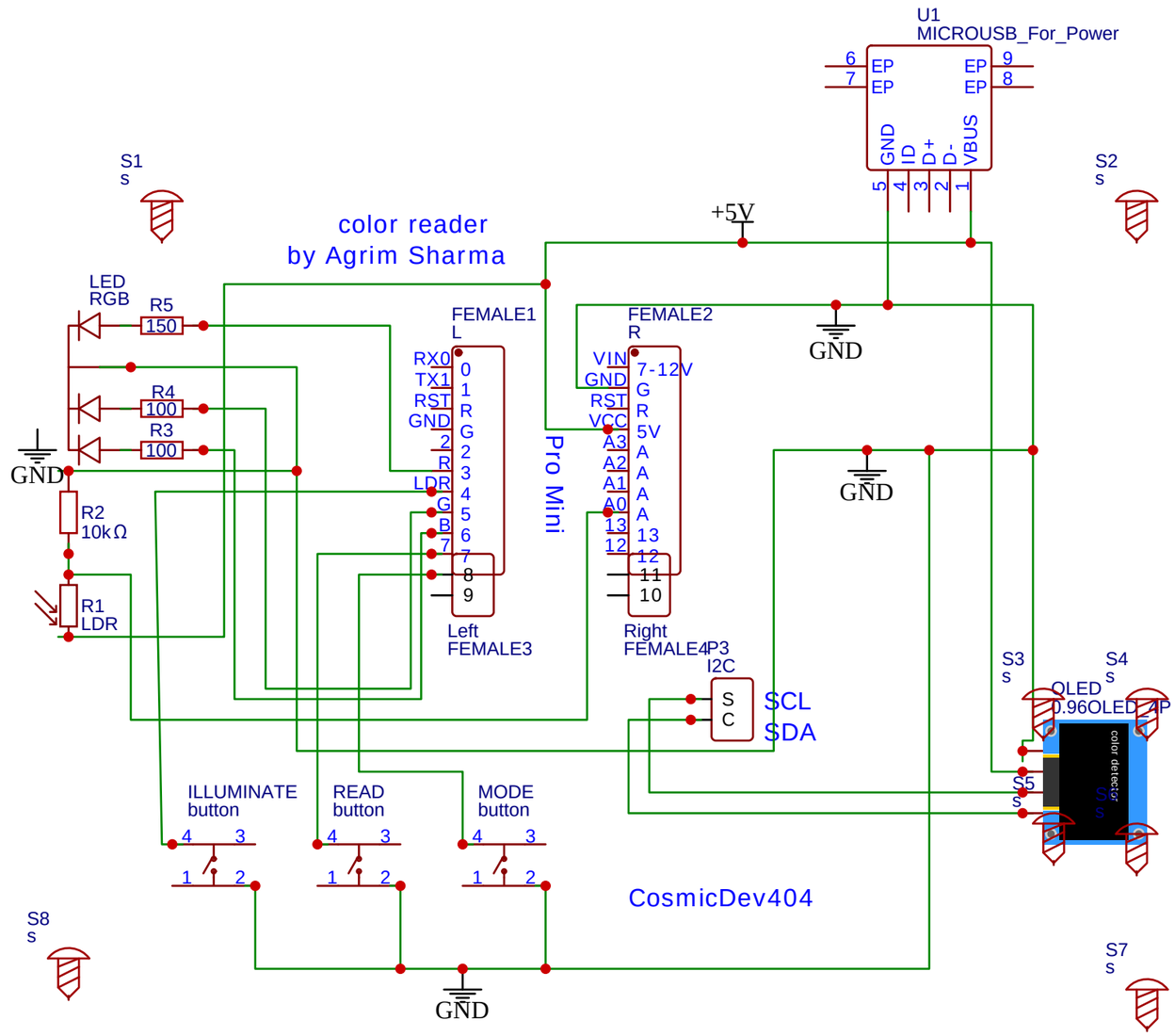

TITLE: Color Reader		REV: 1.0
EasyEDA	Company: HackClub	Sheet: 1/1
	Date: 2026-01-07 Drawn By: Agrim Sharma	